Sezione - Cross section - Schnittzeichnung - Section - Sección - Sektion

E-MPS

E-MPSM 304 E-MPSM 504
E-MPSM 305 E-MPSM 505
E-MPSM 306

Service kit

Pos	Qtà
12.10	1
12.42	1
14.20	1
28.04	1
34.09	2
34.13	3
36.00	1
70.08	1
70.09	1
70.12	1
70.23	3
70.31	1
72.00	1
72.02	1
73.00	1
76.01	1
81.00	1
94.00	1
96.00	1

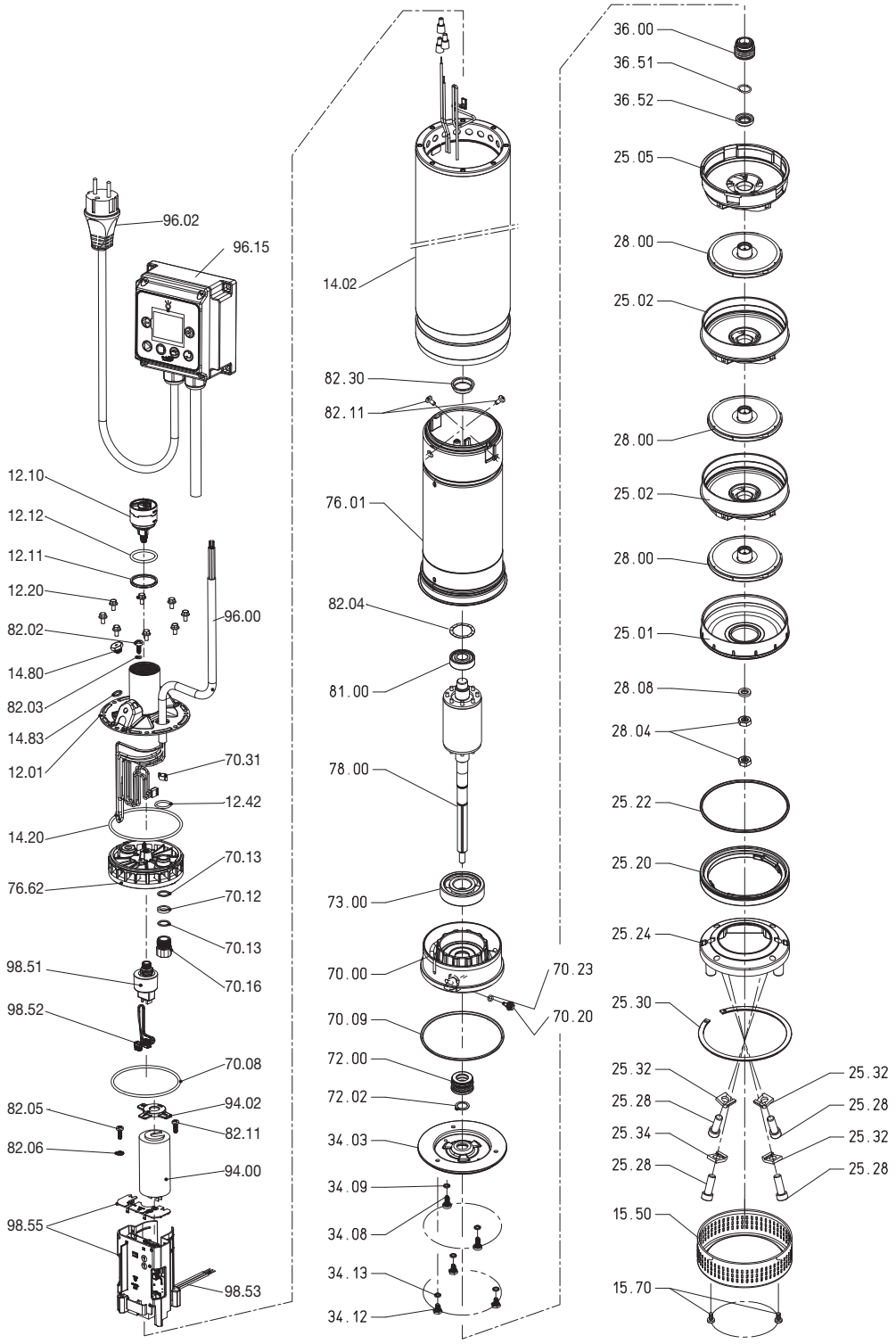

www.motralec.com / service-commercial@motralec.com / 01.39.97.65.10